Tous droits strictement reserves. Reproduction ou communication a des tiers interdite sous quelque forme que ce soit sans autorisation ecrite du propietaire.
Propriete de c FCI. Droits de reproduction FCI.

All rights strictly reserved. Reproduction or issue to third parties in any form whatever is not permitted without written authority from the proprietor.
Property of FCI. Copyright FCI.

PRODUCT NO.	ROWS		POWER				SIGNAL							POWER				
		E2	P8	P7	P6	P5	7	6	5	4	3	2	1	P4	P3	P2	P1	E1
51940-038_ _ Note: (3)	D C B A	HA	PA	PA	PA	PA	E	E	E	E	E	E	E	PA	PA	PA	PA	HA

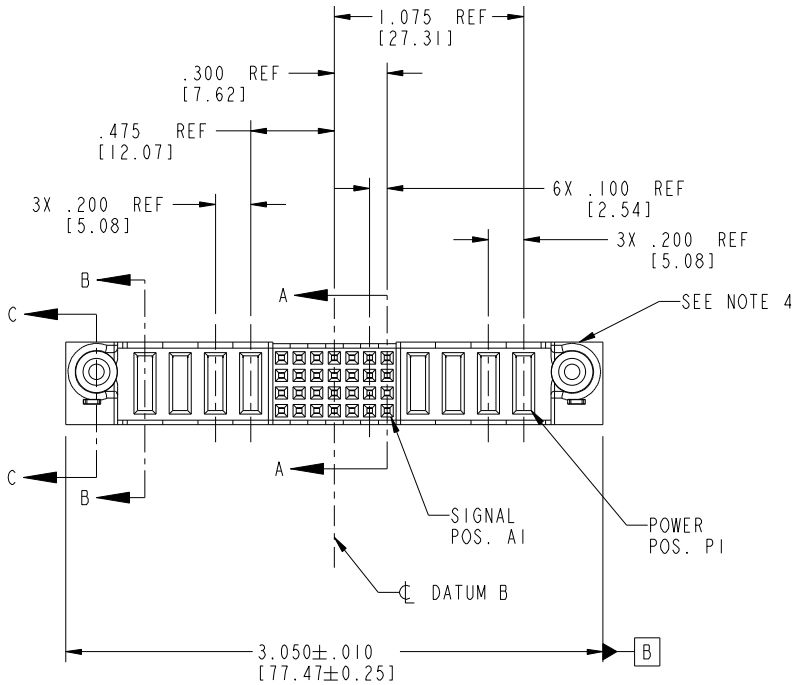

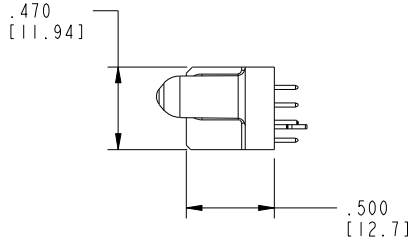

CODE	DIM "M" MATING LENGTH	CONTACT TYPE
PA	.042 [1.07]	POWER
E	N/A [N/A]	SIGNAL
HA	N/A [N/A]	HOLD-DOWN

mat'l code	SEE NOTE 2

ltr	ecn no.	dr	date
A	V03-0391	MEM	4/7/03
B	DG04-0086	LH	11/26/04
C	DG05-0123	SJ	05/24/05
D	DG08-0272	SH	09/28/08

sheet index	revision	D	D
	sheet	1	2

tolerances unless otherwise specified		
linear	.XX±.01/0.X±0.3	
	.XXX±.005/0.XX±0.13	
	.XXXX±.0020/0.XXX±0.051	
angles	0° ±2°	
dr	M.MOSTOLLER	4/7/03
engr	M.MOSTOLLER	4/7/03
chr	H.BREWBAKER	4/7/03
appd	M.MOSTOLLER	4/7/03

D	D
3	4

CUSTOMER
COPY

projection

INCH/MM

scale 1:1

FCI www.fciconnect.com

title: 4P + 28S + 4P VERTICAL SOLDER RECEPT

product family: PwrBlade | code: 213

size: A | dwg no: 51940-038 | sheet: 1 of 4

cage code: 22526

Pro/E

PDM: Rev:D STATUS:Released Printed: Oct 17, 2008

Tous droits strictement reserves. Reproduction ou communication a des tiers interdite sous quelque forme que ce soit sans autorisation ecrite du propietaire. Propriete de c FCI. Droits de reproduction FCI.

PRODUCT NUMBER
51940-038__ Note:(3)

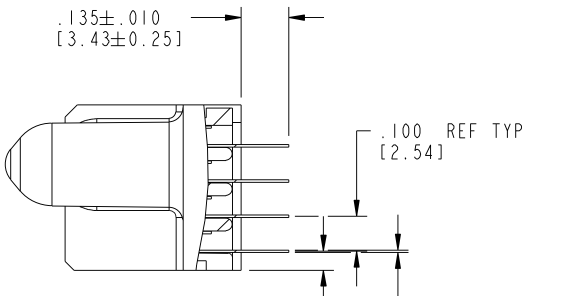

SECTION A-A
SCALE 2:1

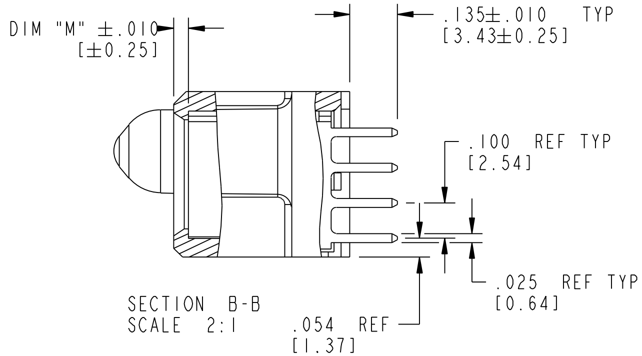

SECTION B-B
SCALE 2:1

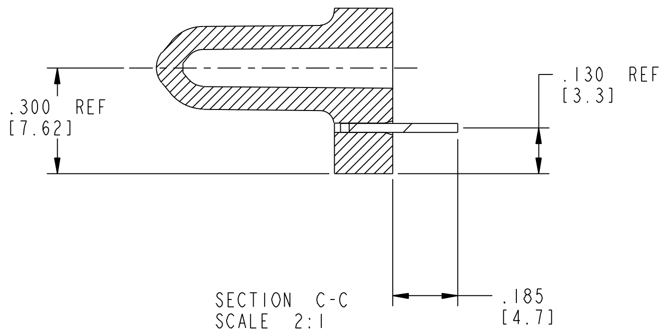

SECTION C-C
SCALE 2:1

mat'l code	SEE NOTE 2			tolerances unless otherwise specified			CUSTOMER COPY	FCI www.fciconnect.com
ltr	ecn no.	dr	date	linear	.XX±.01/0.X±0.3 .XXX±.005/0.XX±0.13 .XXXX±.0020/0.XXX±0.051		projection	title 4P + 28S + 4P VERTICAL SOLDER RECEPT
D				angles	0°±2°			product family PwrBlade; code 213
				dr	M.MOSTOLLER	4/7/03	INCH/MM	size A; dwg no 51940-038; sheet 2 of 4
				engr	M.MOSTOLLER	4/7/03		
				chr	H.BREWBAKER	4/7/03	scale 1:1	
				appd	M.MOSTOLLER	4/7/03		
sheet index	revision sheet							

Pro/E

cage code 22526

All rights strictly reserved. Reproduction or issue to third parties in any form whatever is not permitted without written authority from the proprietor. Property of FCI. Copyright FCI.

PDM: Rev:D STATUS: Released Printed: Oct 17, 2008

Tous droits strictement reserves. Reproduction ou communication a des tiers interdite sous quelque forme que ce soit sans autorisation ecrite du propietaire.
Propriete de c FCI. Droits de reproduction FCI.

All rights strictly reserved. Reproduction or issue to third parties in any form whatever is not permitted without written authority from the proprietor.
Property of FCI. Copyright FCI.

PRODUCT NUMBER
51940-038__
Note: (3)

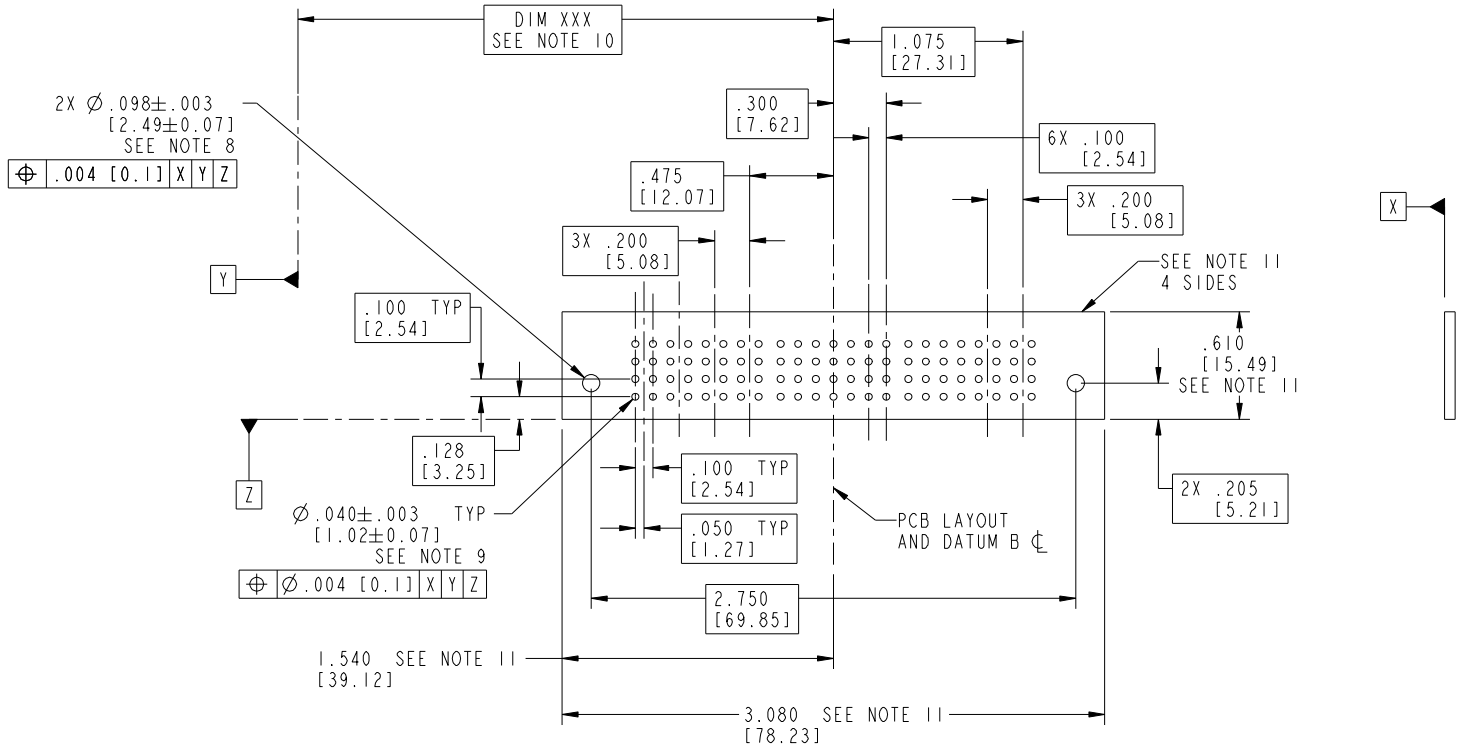

RECOMMENDED PCB LAYOUT

mat'l code	SEE NOTE 2	tolerances unless otherwise specified			CUSTOMER	FCI	www.fciconnect.com
ltr	ecn no.	dr	date	linear	.XX±.01/0.X±0.3	COPY	
D					.XXX±.005/0.XX±0.13	projection	title: 4P + 28S + 4P VERTICAL SOLDER RECEPT
					.XXXX±.0020/0.XXX±0.051		
				angles	0° ±2°		
				dr	M.MOSTOLLER 4/7/03	INCH/MM	product family: PwrBlade; code: 213
				engr	M.MOSTOLLER 4/7/03		
				chr	H.BREWBAKER 4/7/03	scale: 1:1	size: A; dwg no: 51940-038; sheet: 3 of 4
				appd	M.MOSTOLLER 4/7/03		
sheet index	revision / sheet						

Pro/E

cage code 22526

PDM: Rev:D STATUS: Released Printed: Oct 17, 2008

Tous droits strictement reserves. Reproduction ou communication a des tiers interdite sous quelque forme que ce soit sans autorisation ecrite du propietaire.
Propriete de c FCI. Droits de reproduction FCI.

All rights strictly reserved. Reproduction or issue to third parties in any form whatever is not permitted without written authority from the proprietor.
Property of FCI. Copyright FCI.

PRODUCT NUMBER
51940-038__
Note: (3)

NOTES:

1. DIMENSIONS AND TOLERANCES ARE IN ACCORDANCE WITH ASME Y14.5M, 1994 UNLESS OTHERWISE SPECIFIED.

CONNECTOR NOTES:

(2) HOUSING MATERIAL: UL 94 V-0 GLASS FILLED
HIGH-TEMP THERMOPLASTIC
POWER CONTACT MATERIAL: COPPER ALLOY
SIGNAL PIN MATERIAL: COPPER ALLOY

3. PLATING:
△D SEE ITEM 5 & 6 IN PRINT 10064183 FOR PLATING SPEC OF 51940-038 AND 51940-038LF RESPECTIVELY

(4) MANUFACTURER'S NAME, P/N, AND DATE CODE TO APPEAR ON THIS SURFACE.

5. PRODUCT SPECIFICATION GS-12-149.
APPLICATION SPECIFICATION BUS-20-067.

6. PACKAGED IN TRAYS.

PCB NOTES:

7. ALL HOLE DIAMETERS ARE FINISHED HOLE SIZE.

(8) MOUNTING HOLES, WHERE APPLICABLE, ARE UNPLATED.

(9) Ø.0453±.0010 [1.151±0.025] DRILLED HOLES PLATED WITH .0003 [0.008] MIN SnPb OVER .001 [0.03] TO .003 [0.08] Cu PLATING TO ACHIEVE Ø.040±.003 [1.02±.07] HOLE.

(10) "DIM XXX" TO BE DETERMINED BY THE CUSTOMER.

(11) CONNECTOR KEEP-OUT ZONE.

12. A △D SYMBOL WILL BE NEXT TO ANY DIMENSION, VIEW, OR NOTE WHICH HAS BEEN MODIFIED WITH CURRENT DRAWING VERSION

mat'l code	SEE NOTE 2

ltr	ecn no.	dr	date
D			

tolerances unless otherwise specified		
linear	.XX±.01/0.X±0.3	
	.XXX±.005/0.XX±0.13	
	.XXXX±.0020/0.XXX±0.051	
angles	0° ±2°	
dr	M.MOSTOLLER	4/7/03
engr	M.MOSTOLLER	4/7/03
chr	H.BREWBAKER	4/7/03
appd	M.MOSTOLLER	4/7/03

sheet index	revision
	sheet

CUSTOMER
COPY
projection
INCH/MM
scale 1:1

www.fciconnect.com

title: 4P + 28S + 4P VERTICAL SOLDER RECEPT

product family	PwrBlade	code 213
size A	dwg no 51940-038	sheet 4 of 4

Pro/E

cage code 22526

PDM: Rev:D STATUS: Released Printed: Oct 17, 2008